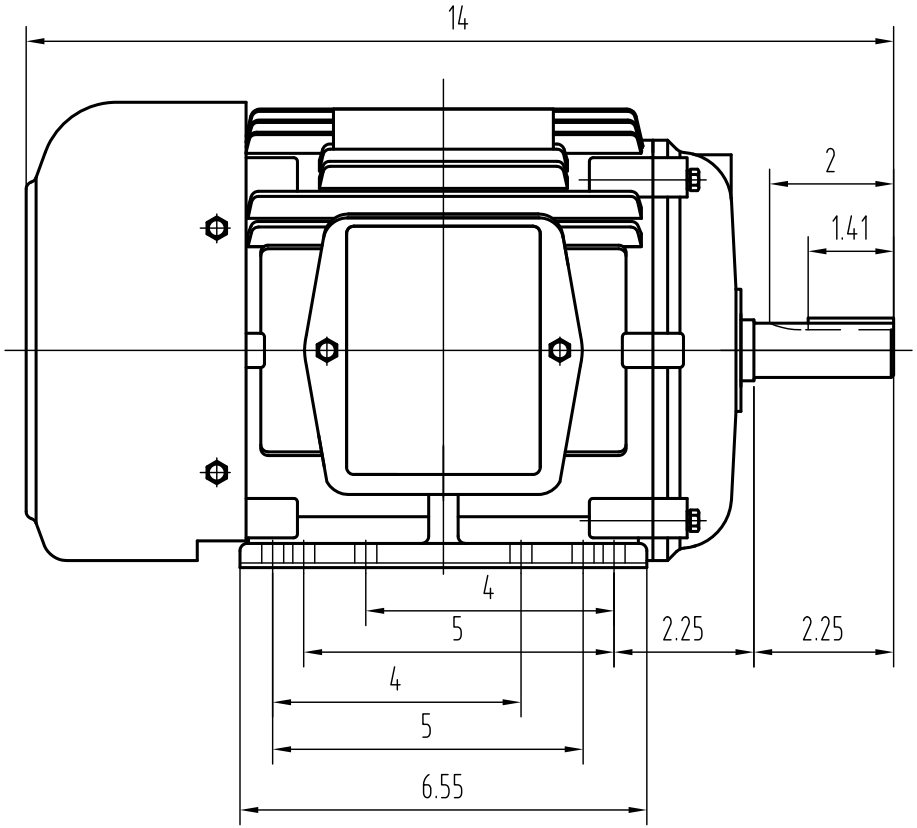

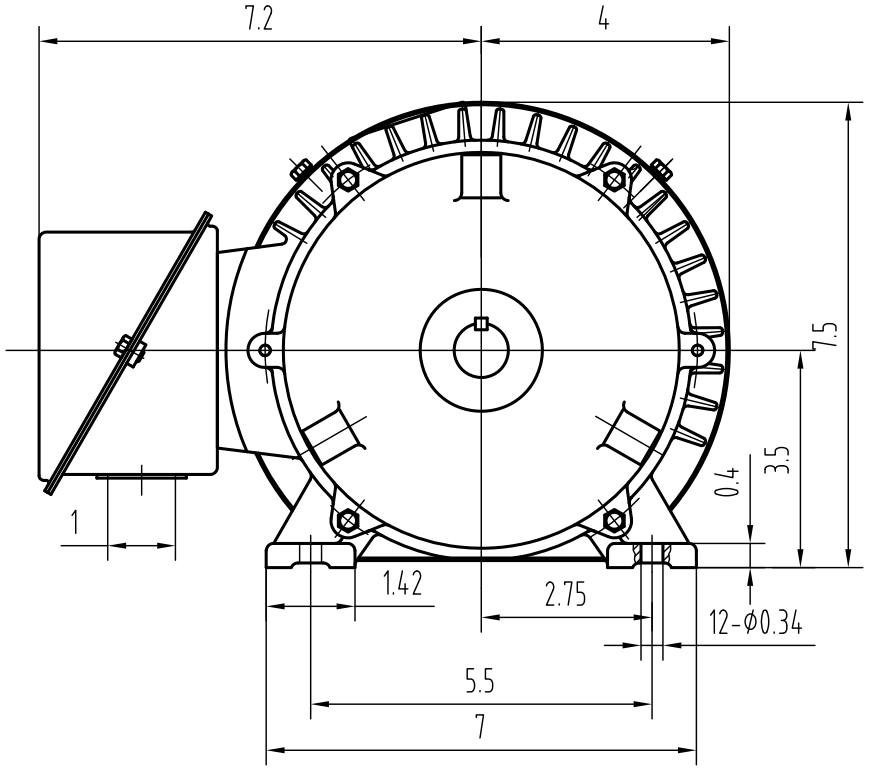

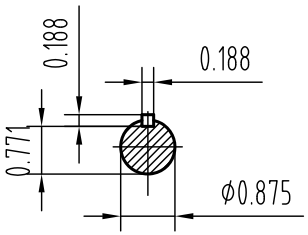

Mark	No.	Zone	Changed file No.	Signatuce	Date

Design			Standard		
Check					
Auditing					
Technics			approval		

Sign	Weight	Scale
		1:3
Total page	page No.	

TEFC 143/145T

OMEC MOTORS

MAKE THE WORLD MORE EFFICIENT

OUR MOTION IS YOUR PROFITS

OMEC NORTH AMERICA INC